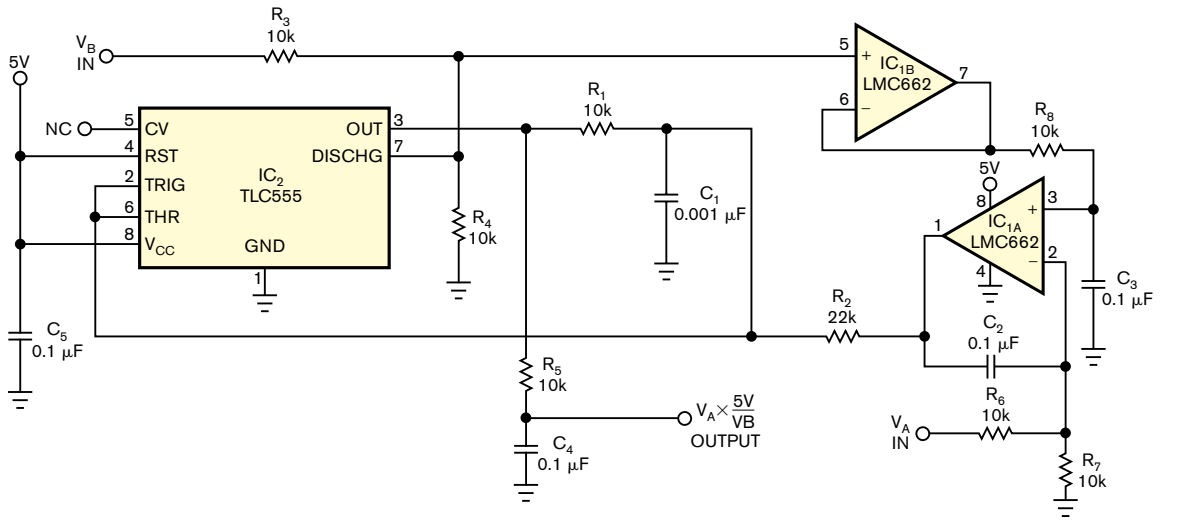

Figure 1 This low-cost pulse-width modulator performs analog division. Inputs V_A and V_B control this low-cost pulse-width modulator, and a lowpass filter follows it.